M1 60cc - PULL START

FEATURES	
Cylinder volume	60.00 cm³ max
Bore	41.80 mm
Max. theoretical bore	41.97 mm
Stroke	43.35 mm max
Cooling system	Air
Inlet system	Piston Valve
Number of carbs	1

Carburettor Tillotson	HS-323A	Cylinder/crankcase transfers n°	2
Number of piston rings	1	Inlet/exhaust ports	1 / 2
Big end conrod ball-bearing diameter	18x24x15	Combustion chamber shape	Spherical
Crankshaft ball-bearing diameter	20x47x14	Selettra ignition	Analogic Cod. A-61953-C
Small end conrod ball-bearing diameter	12x16x16	Distance between Conrod centres	96 mm

DRAFT

DESCRIPTION OF THE MATERIAL		PISTON
Conrod material	Steel	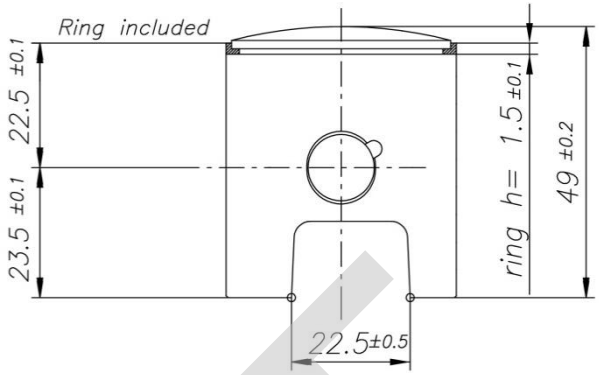 Min Weight (ring incl.) 60 g
Crankshaft material	Steel	
Head material	Aluminium	
Cylinder material	Aluminium	
Liner material	Cast Iron	DISTANCE BETWEEN CONROD CENTERS
Crankcase material	Aluminium	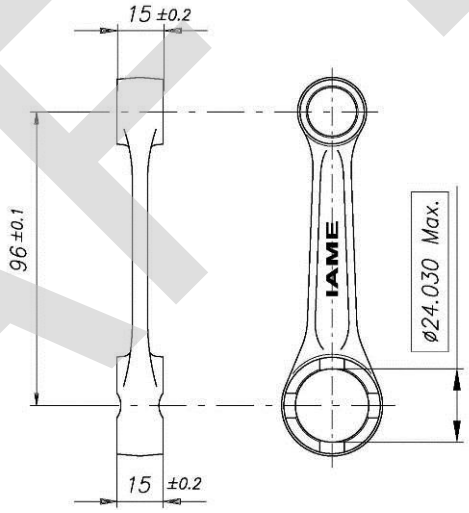 Min. Weight 97 g
Piston material	Aluminium	
Piston rings material	Cast Iron	
Exhaust muffler material	Sheet-steel	
Ball-bearings	6204 type	

CRANKSHAFT

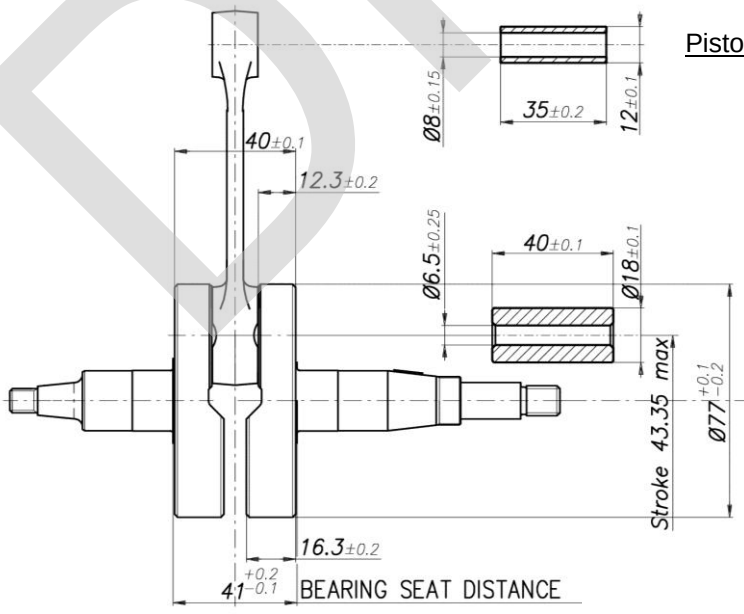

Piston pin min. weight 15.5g

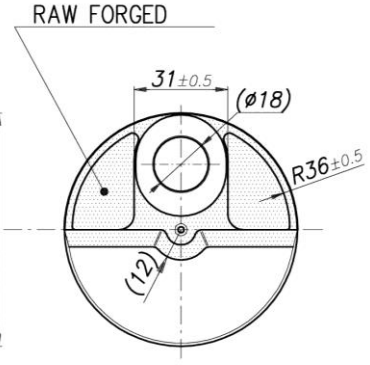

Complete Crankshaft min. weight 1280 g

DRAFT

CYLINDER DEVELOPMENT

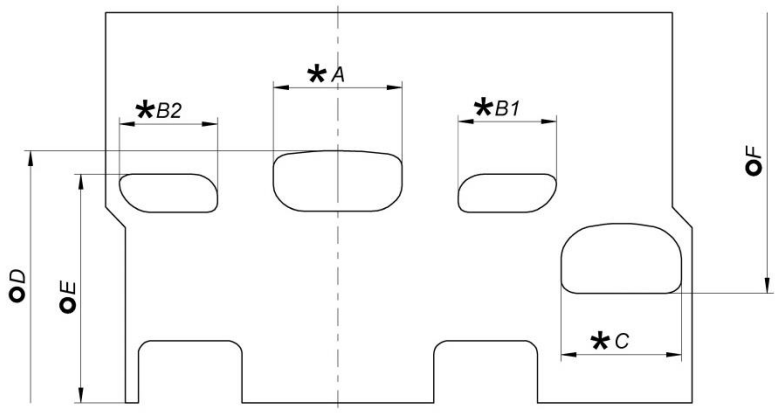

A	27.5 ±0.2 mm
B1 = B2	21.7 ±0.4 mm
C	26 ±0.2 mm
D	151.5° max.
E	114.5° ±1.5°
F	141.5° max.

TOOL IAME Cod. 10194

* CHORDAL READING

O ANGULAR READING BY INSERT A 0.2x5 mm GAUGE
USING IAME TOOL - Cod. 10194

CYLINDER BASE VIEW

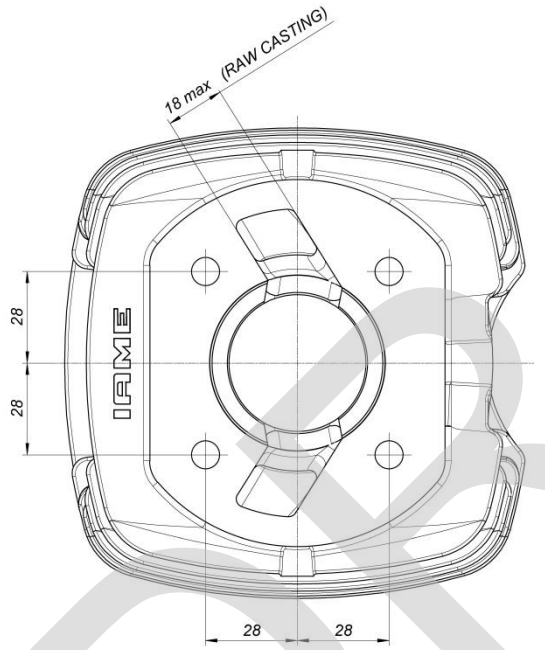

CYLINDER CROSS SECTION VIEW

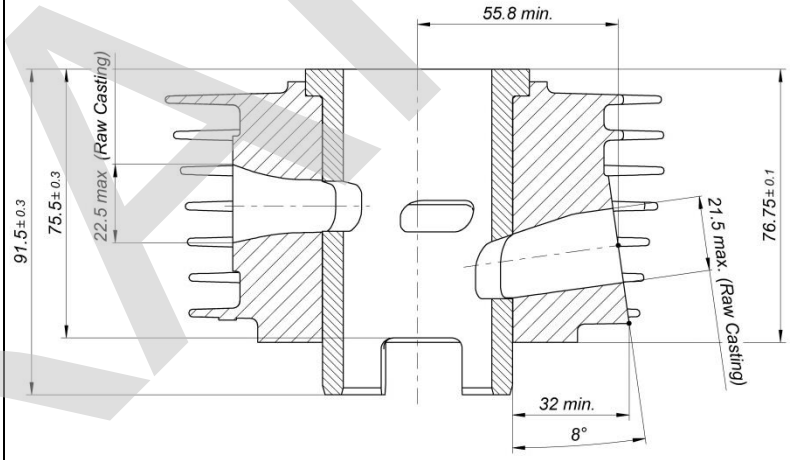

COMBUSTION CHAMBER VIEW

COMBUSTION CHAMBER VOLUME = 6.1 + 2 = TOT 8.1 cm³ min.

SQUISH MIN.= 0.070" (1.8 mm)
(measured with 0.125" (1/8") / Ø3.175mm solder)

Combustion chamber volume in the cylinder head
(with Volumeter and CIK insert):

7.1 cm³ min

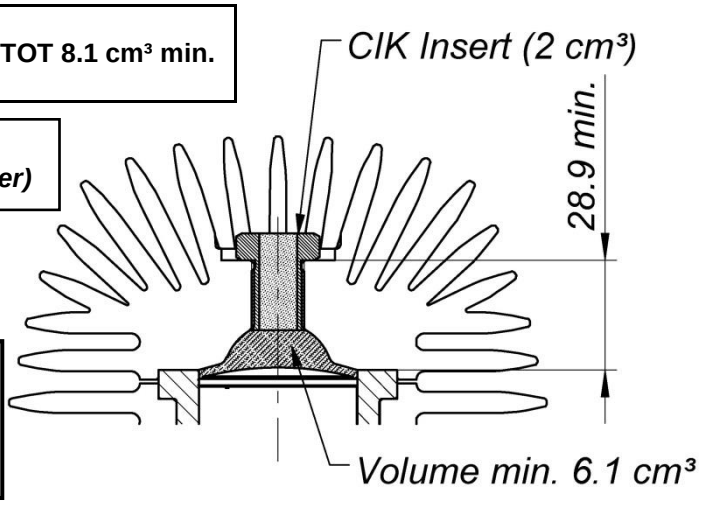

DRAFT

THERMAL SPACER	INLET SILENCER
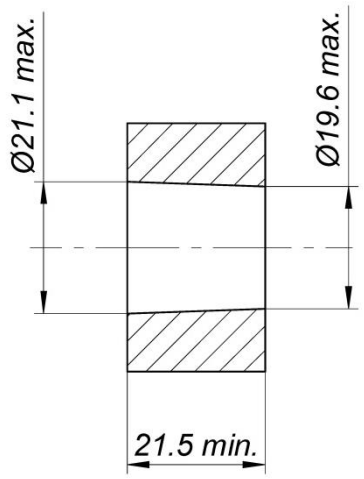 Q.ty: 1	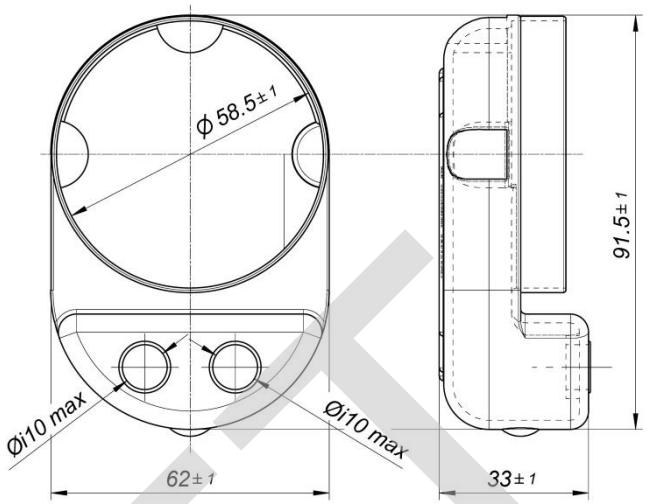

CRANKCASE INSIDE VIEW

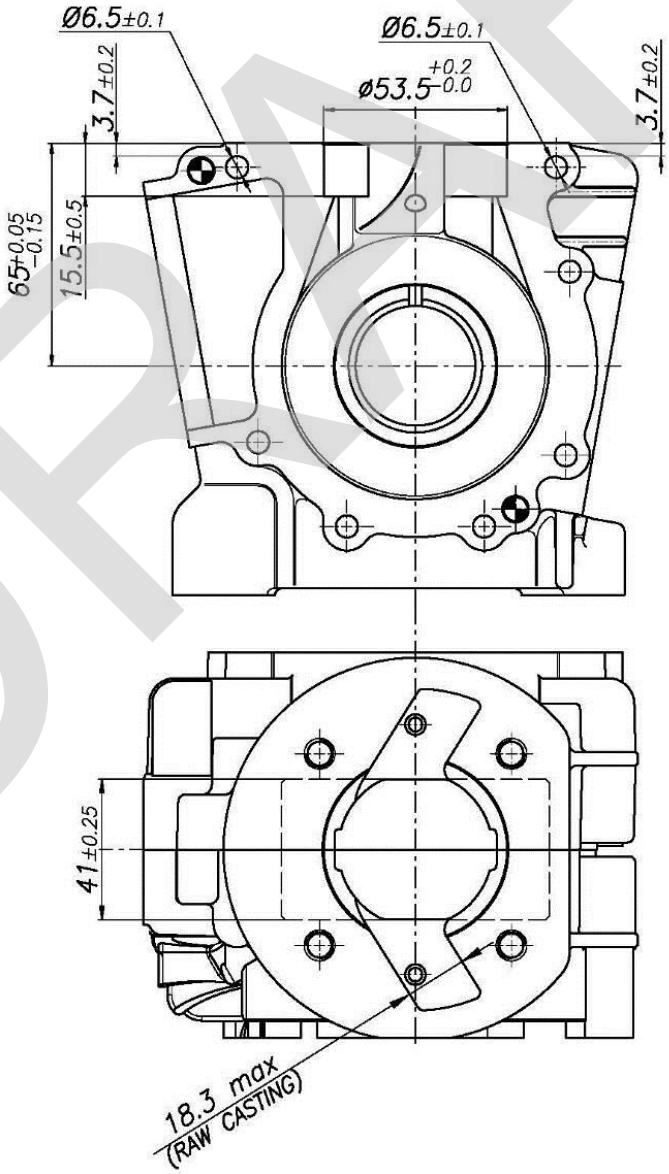

DRAFT

INLET SYSTEM EXPLODED VIEW

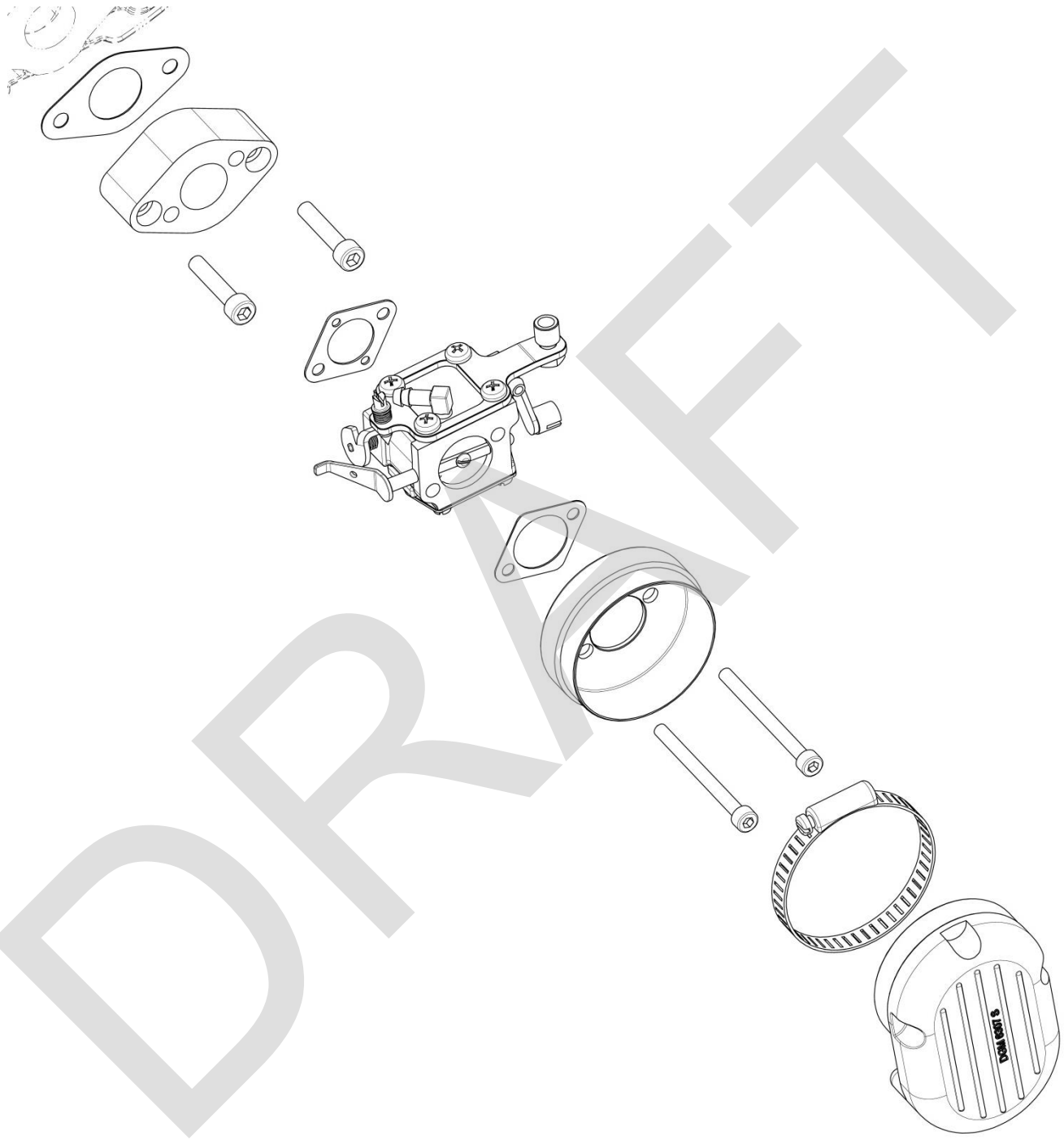

DRAFT

DESCRIPTION OF THE CLUTCH

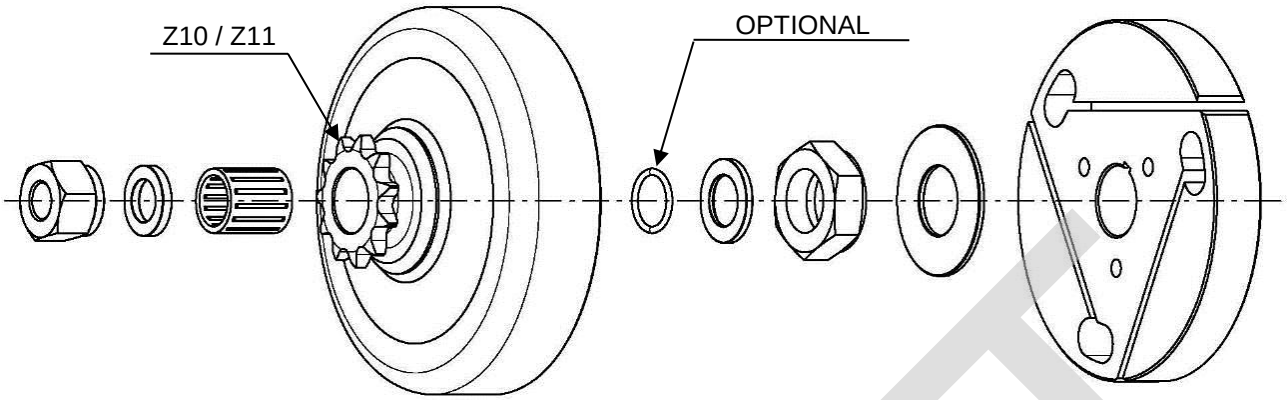

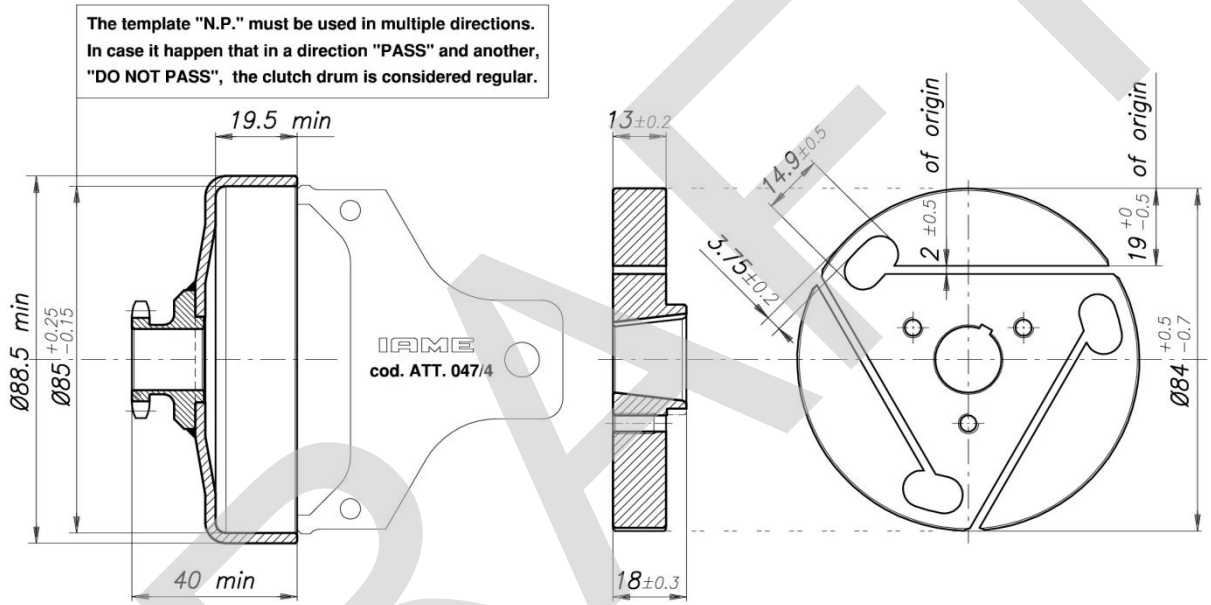

Min. Weight
210 g

Min. Weight
445 g

EXHAUST MANIFOLD

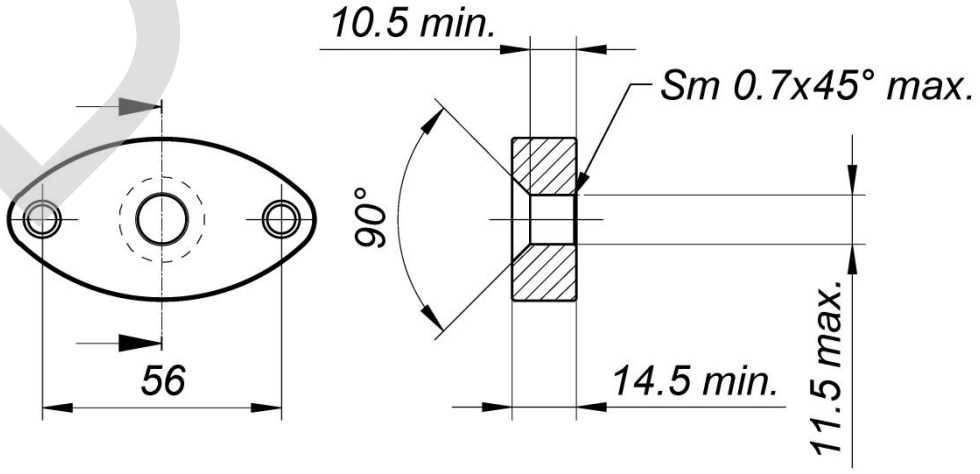

DRAFT

EXHAUST MUFFLER VIEW AND DIMENSIONS

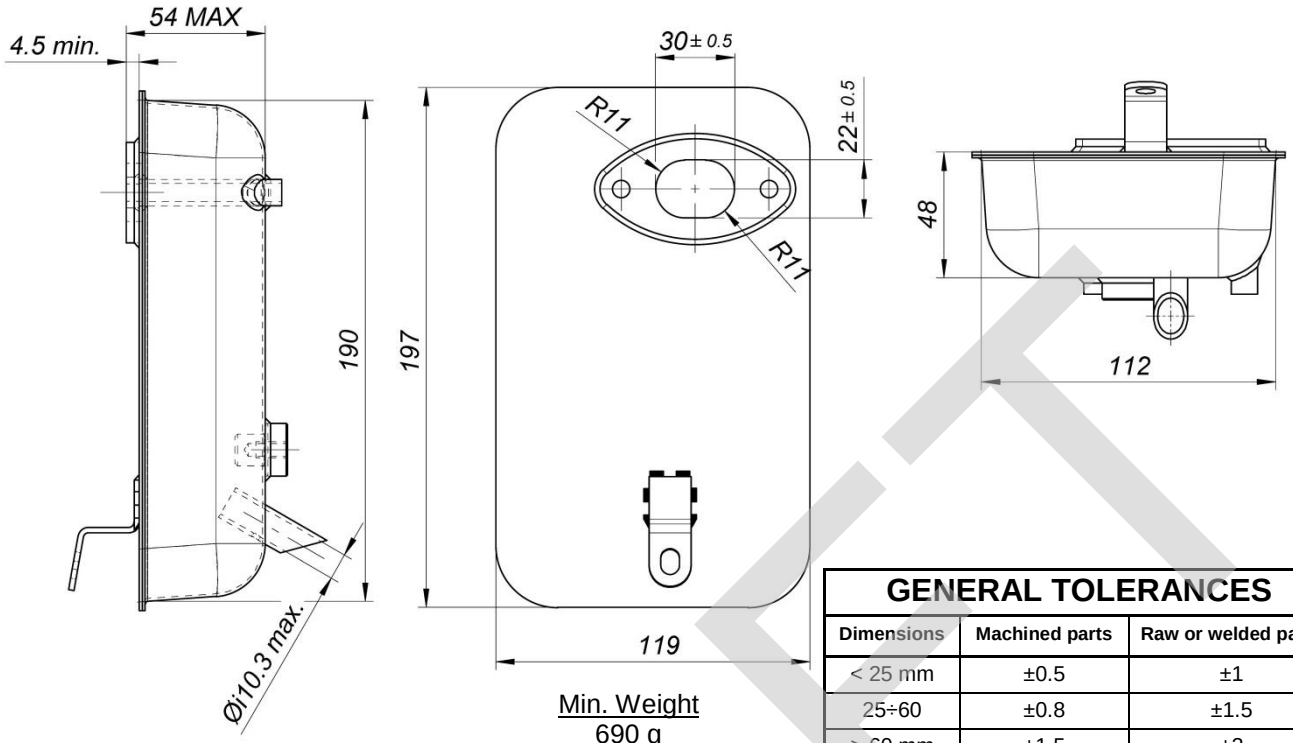

Min. Weight
690 g

GENERAL TOLERANCES		
Dimensions	**Machined parts**	**Raw or welded parts**
< 25 mm	±0.5	±1
25÷60	±0.8	±1.5
> 60 mm	±1.5	±3

IGNITION PHOTO IDENTIFICATION MARKING

Min. Weight
362 g

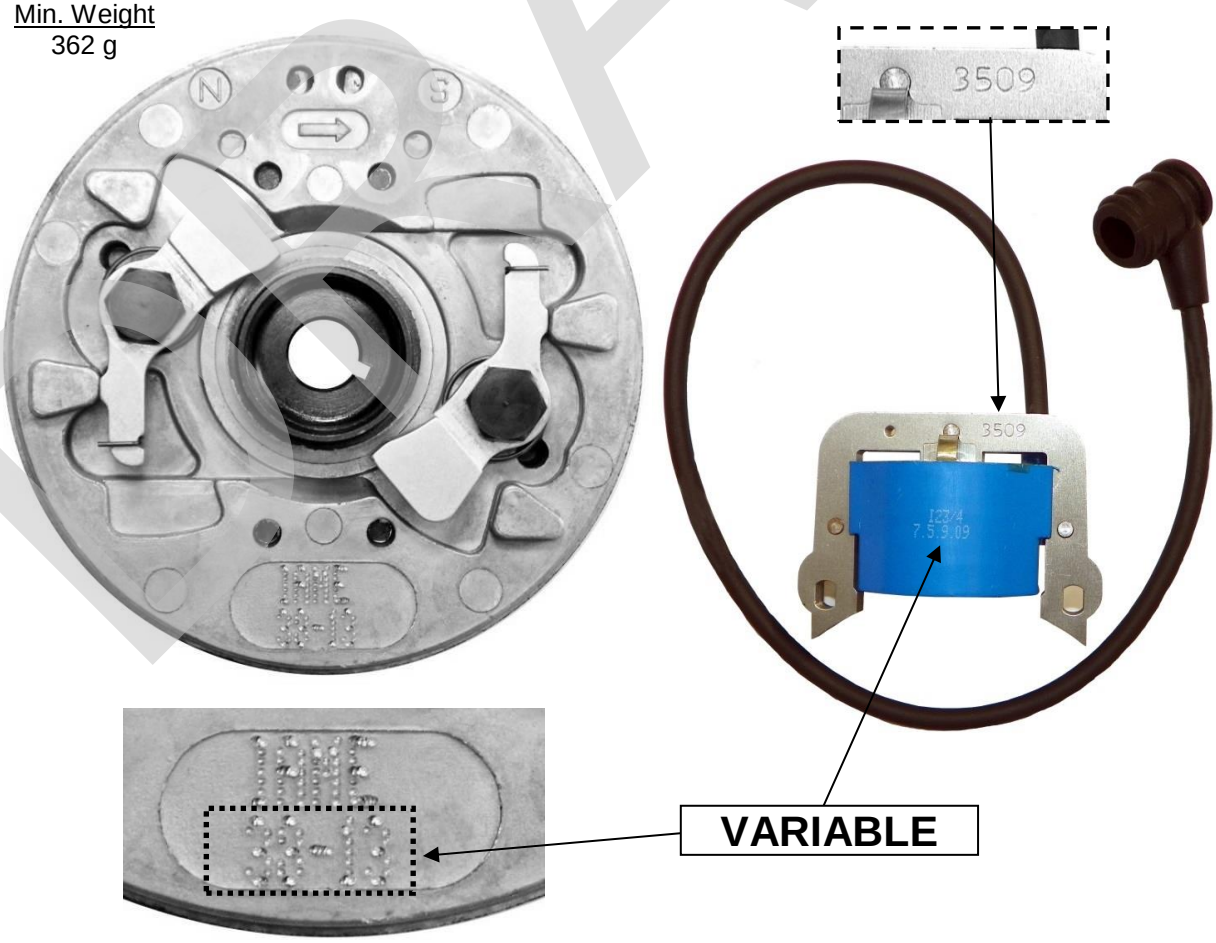

DRAFT

EXHAUST SYSTEM EXPLODED VIEW

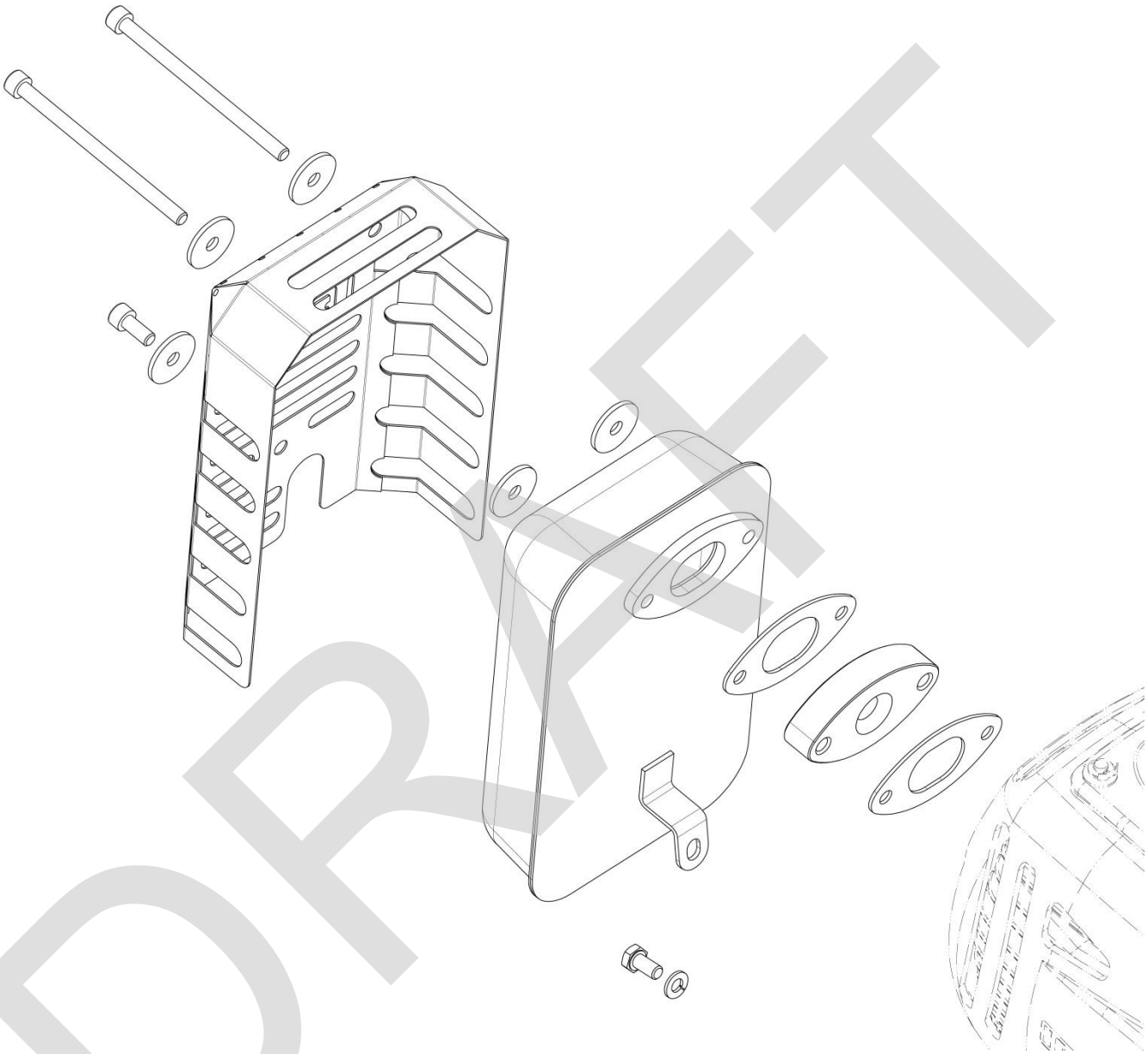

DRAFT

SCHEME FOR ADVANCE CONTROL

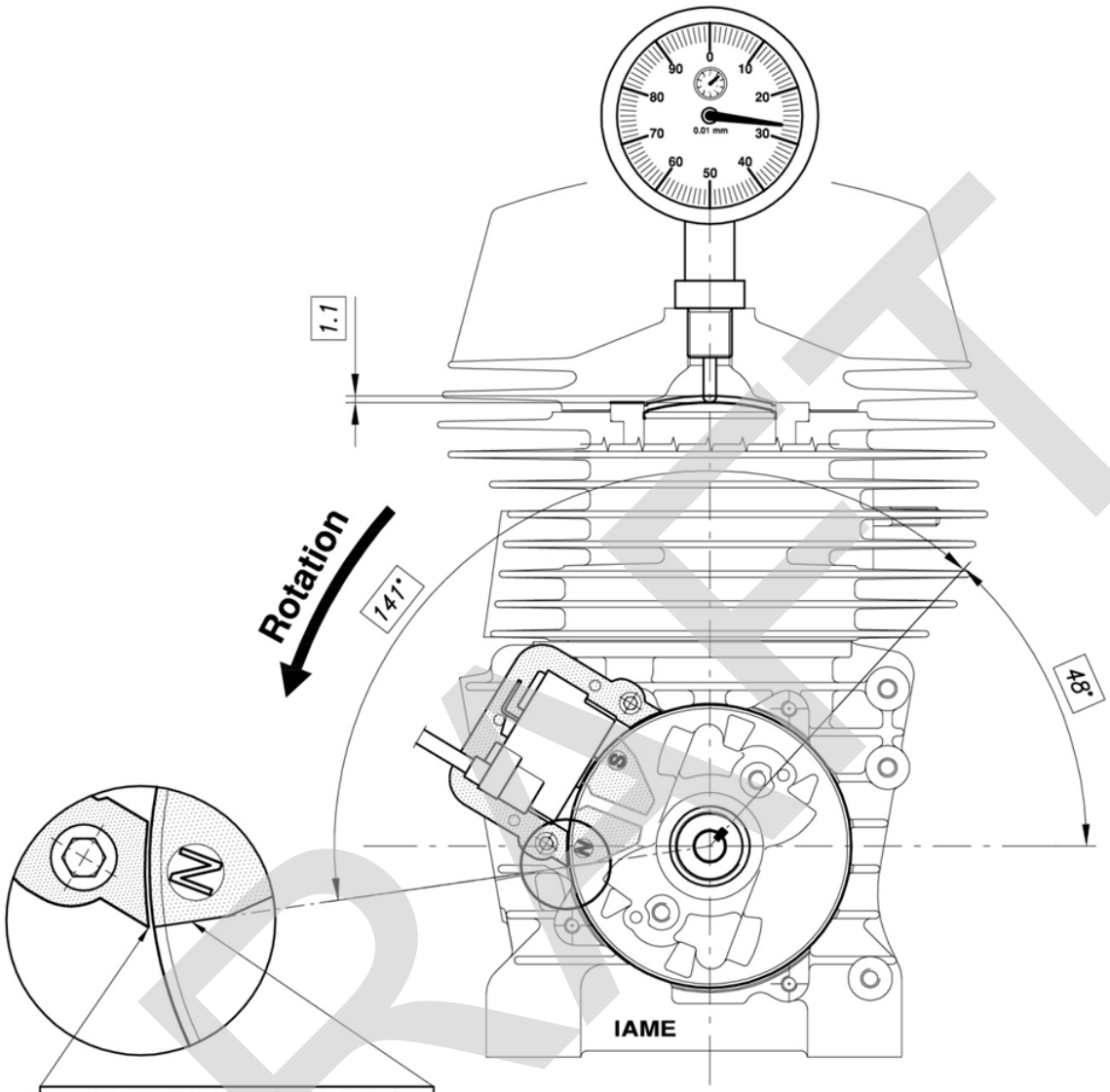

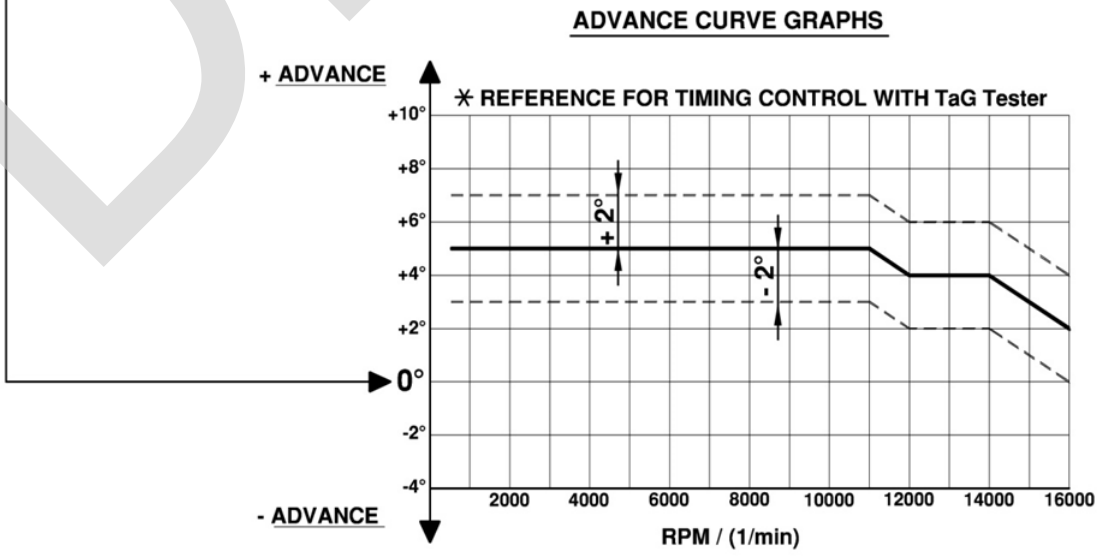

DRAFT

CYLINDER IDENTIFICATION MARKING

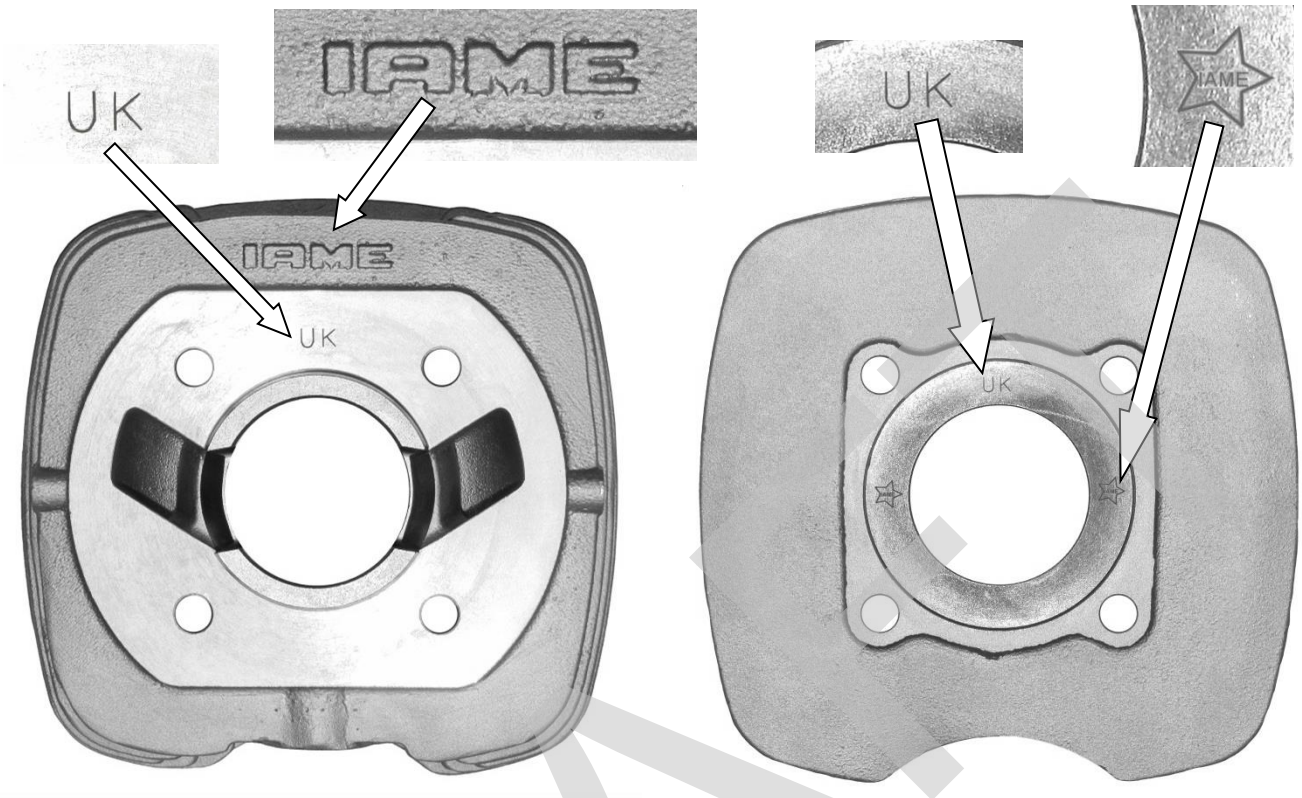

CRANKCASE IDENTIFICATION MARKING

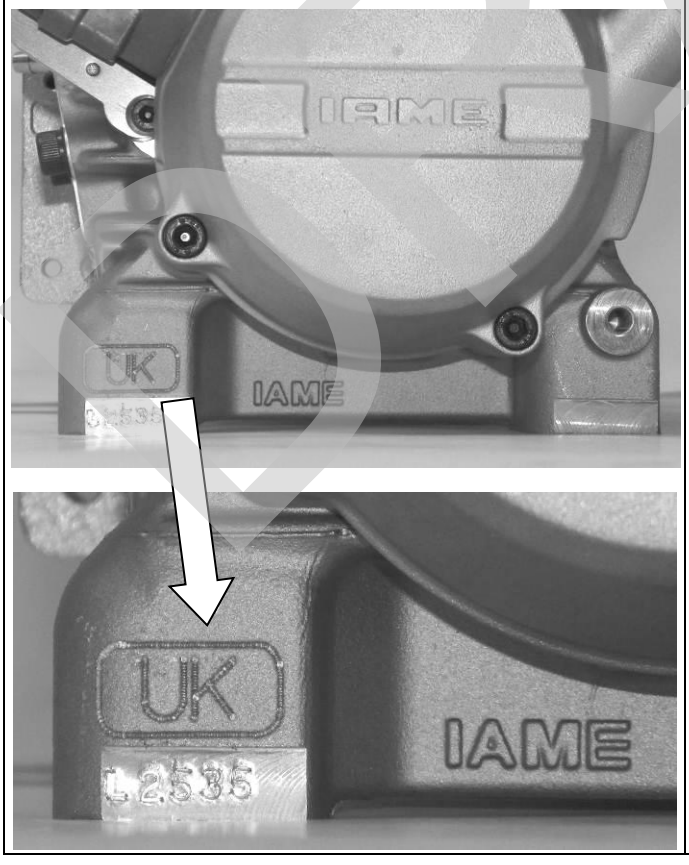

CYLINDER HEAD IDENTIFICATION MARKING

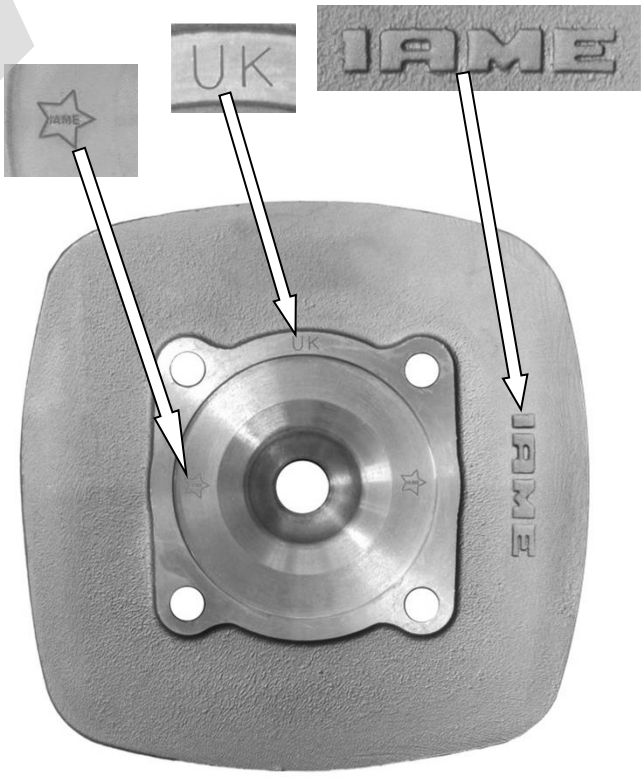

EXHAUST IDENTIFICATION MARKING	CONROD / PISTON IDENTIFICATION MARKINGS
	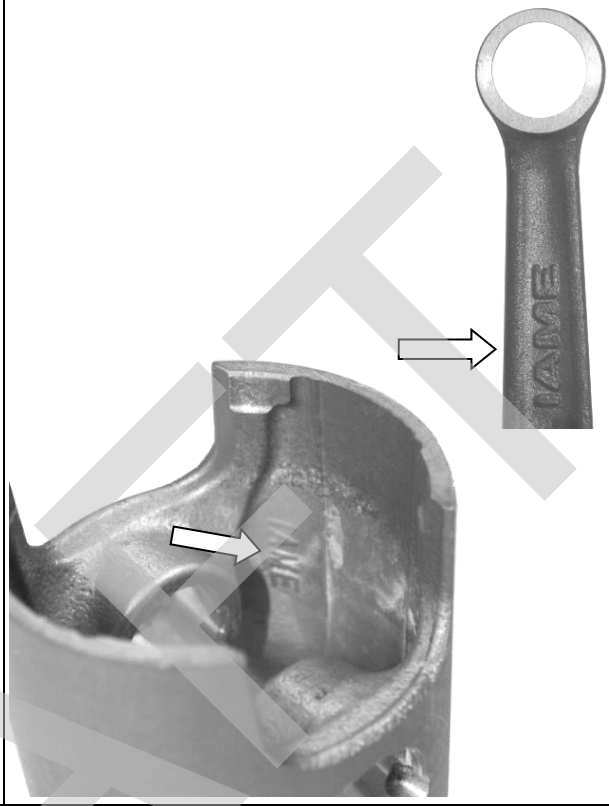
CLUTCH HUB IDENTIFICATION MARKING	**CLUTCH DRUM IDENTIFICATION MARKING**
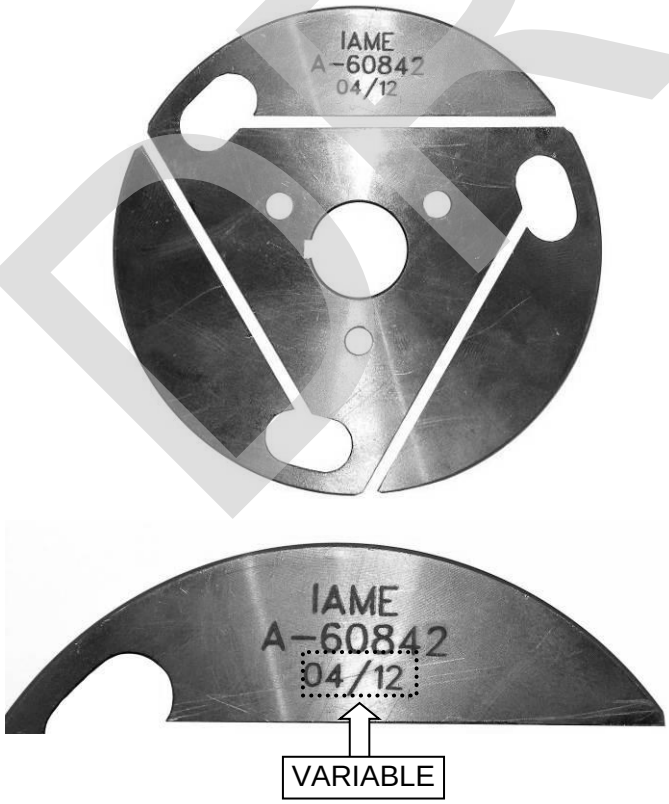	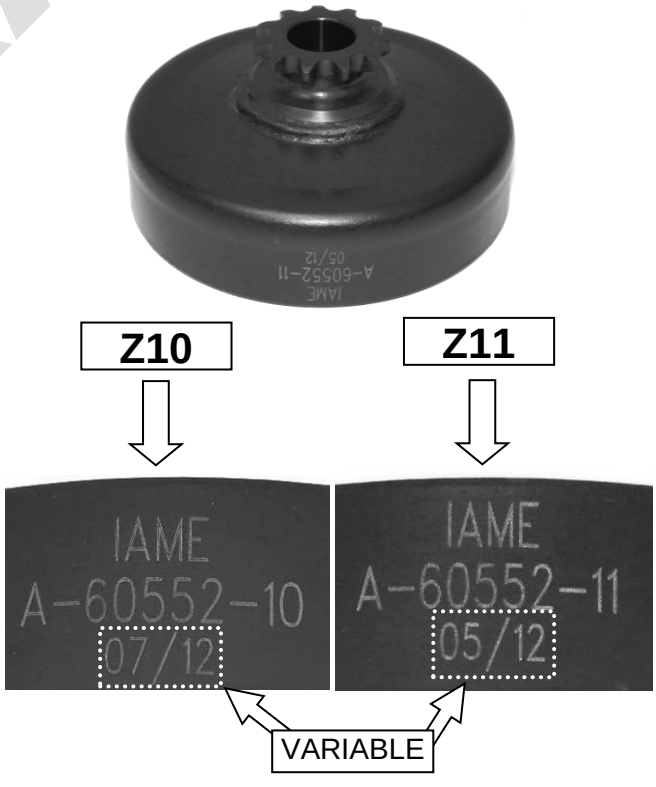

DRAFT

CRANKSHAFT PHOTOS

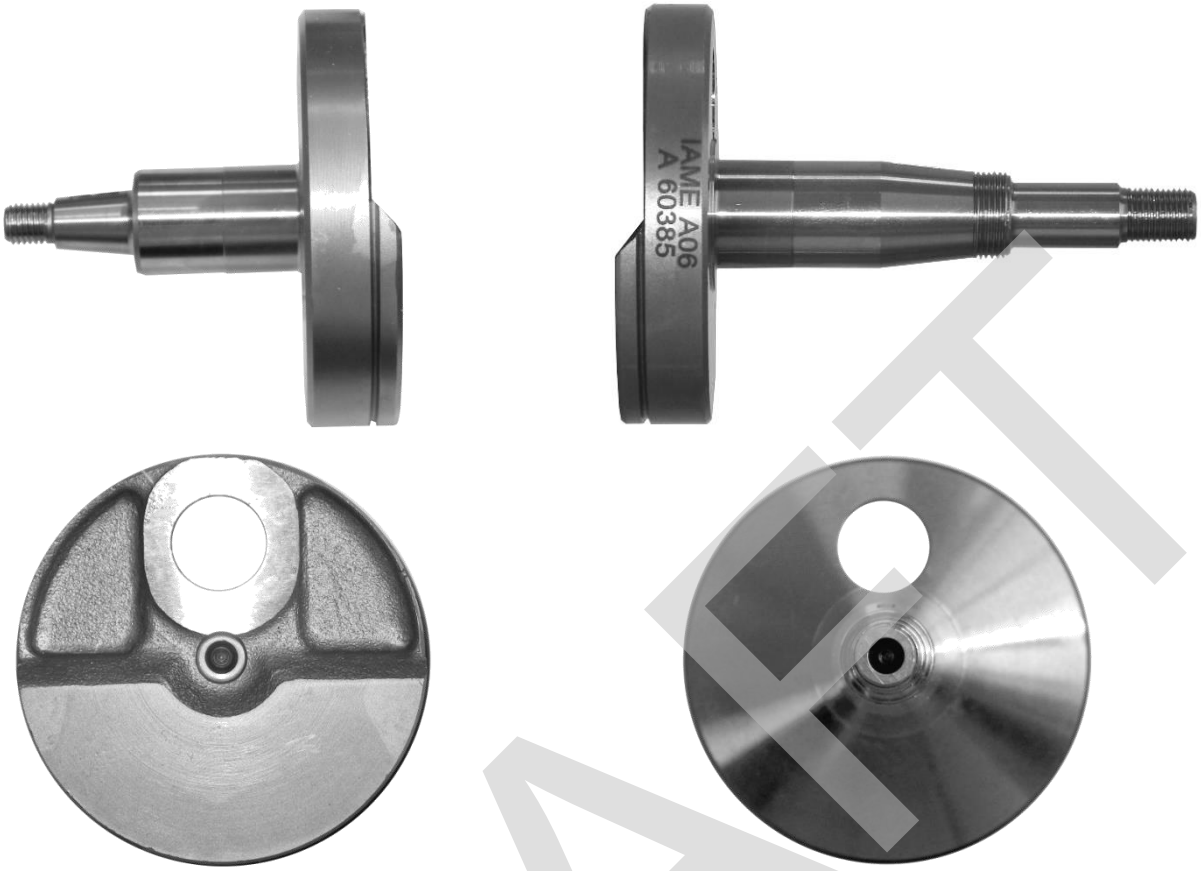

CRANKSHAFT IDENTIFICATION MARKINGS

PARTICULAR OF COMPLETE CRANKSHAFT

DRAFT

ALTERNATIVE CLUTCH DRUM

Z10

Z11

VARIABLE

DRAFT

ALTERNATIVE CLUTCH COVER

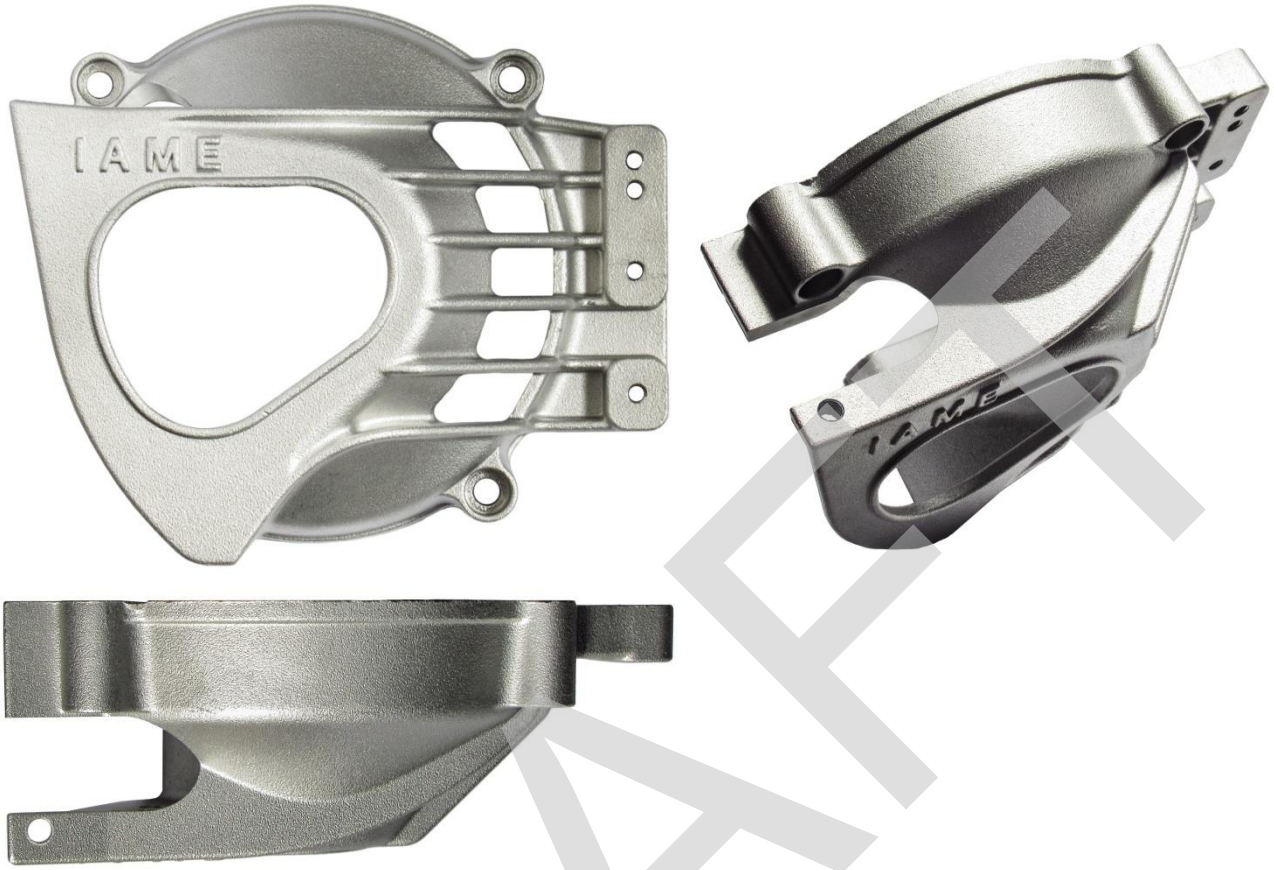

PULLEY PHOTO IDENTIFICATION MARKING

DRAFT